Owner's Manual

60 Hz Air-Cooled Generators

10 kW to 28 kW

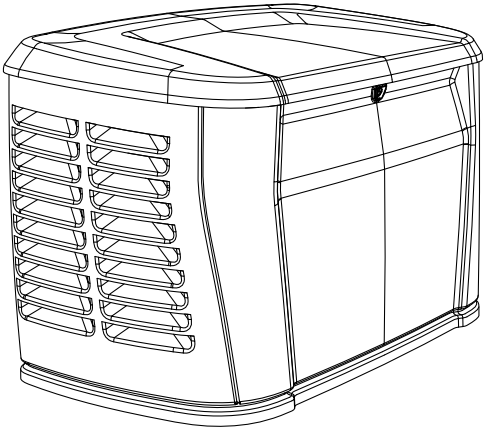

WARNING

Loss of life. This product is not intended to be used in a critical life support application. Failure to adhere to this warning could result in death or serious injury. (000209b)

Register your Generac product at:
WWW.GENERAC.COM
1-888-GENERAC
(888-436-3722)

Para español, visita: http://www.generac.com/service-support/product-support-lookup
Pour le français, visiter : http://www.generac.com/service-support/product-support-lookup

SAVE THIS MANUAL FOR FUTURE REFERENCE

Use this page to record important information about this generator.

Model:	
Serial:	
Production Date:	
Volts:	
LPV Amps:	
NG Amps:	
Hz:	
Phase:	
Controller P/N:	
STA MAC ID:	
SSID:	

Record the information found on the unit data label on this page. See ***General Information*** for the location of the unit data label. The unit has a label plate affixed to the inside partition, to the left of the control panel console as shown in ***Figure 2-1***, ***Figure 2-2***, or ***Figure 2-3***. See ***Operation*** for directions on how to open the top lid and remove the front panel.

Always supply the complete model and serial numbers of the unit when contacting an Independent Authorized Service Dealer (IASD) about parts and service.

Operation and Maintenance: Correct maintenance and care of the unit minimizes operating expenses and errors. It is the operator's responsibility to perform all safety inspections, to verify all maintenance for safe operation is performed promptly, and to have the equipment inspected periodically by an IASD. Normal maintenance, service, and replacement of parts are the responsibility of the owner/operator and are not considered defects in materials or workmanship within the terms of the warranty. Individual operating habits and usage may contribute to the need for additional maintenance or service.

When the generator requires servicing or repairs, Generac recommends contacting an IASD for assistance. Authorized service technicians are factory-trained and are capable of handling all service needs. To locate the nearest IASD, please visit the dealer locator at: ***www.generac.com/Dealer-Locator***.

⚠CALIFORNIA WARNING

This product can expose you to chemicals including benzene, a carcinogen and reproductive toxicant, which are known to the State of California to cause cancer and birth defects or other reproductive harm.

For more information, go to:

www.P65Warnings.ca.gov/

(W000808)

Table of Contents

Section 1: Safety Information

Introduction 1
- Read This Manual Thoroughly 1

Safety Rules..... 1
- How to Obtain Service 2

General Hazards 2
Exhaust Hazards..... 3
Electrical Hazards 3
Fire Hazards..... 3
Explosion Hazards 4
Battery Hazards 4

Section 2: General Information

Generator Components and Control Locations 5
Data Decals..... 8
Specifications 9
- Generator 9
- Engine 9

Protection Systems 10
Emissions..... 10
Fuel Requirements..... 10
Battery Requirements 10
Battery Charger..... 10
Engine Oil Requirements 10
Configuring the Generator..... 10
Generator and Internet Connectivity..... 11
Replacement Parts..... 11
Accessories..... 11

Section 3: Operation

Site Prep Verification..... 13
Generator Enclosure 13
- Opening Generator Lid 13
- Removing Front Access Panel 14
- Removing Intake Side Panel 14
- Closing Generator Lid 14
- Generator Main Line Circuit Breaker (Generator Disconnect) 15
- LED Indicator Lights 15

Generator Emergency Shutdown Switch 15
Control Panel Interface 16
Using the AUTO/OFF/MANUAL/ SERVICE Buttons 16
Operating Modes..... 16
Setting the Exercise Timer 17
- Exercise Operation in Apps 17

Battery Charger 18
Manual Transfer Operation..... 18
- Transfer to Generator Power Source 18
- Transfer to Utility Power Source 18

Selecting Automatic Transfer Operation..... 18
Automatic Sequence of Operation..... 18
- Utility Failure 18
- Cranking 19
- Cold Smart Start 19
- Cleaning Cycle 19
- Load Transfer 19
- Load Shed Before Return to Utility 19

Shutting Generator Down While Under Load or During a Utility Outage 19

Section 4: Maintenance

Maintenance 22
Preparing for Maintenance 22
Performing Scheduled Maintenance 22
Service Schedule..... 23
Maintenance Log 23
Checking Engine Oil Level 24
- Engine Oil Requirements 24

Changing the Oil and Oil Filter 24
Servicing the Air Cleaner..... 25
Spark Plug(s)..... 26
Battery Maintenance..... 26
- Inspecting Battery 27
- Replacing Battery 27
- Battery Disposal 27

Cleaning the Sediment Trap..... 28
Post Maintenance Checks..... 28
- Performing Fuel System Leak Test ...28

Attention After Submersion..... 29
Corrosion Protection..... 29
Remove From and Return To Service Procedure 29
- Remove From Service 29
- Return to Service 29

Section 5: Troubleshooting / Quick Reference Guide

Generator Troubleshooting..... 32
Quick Reference Guide 34
- External LED Indicators 36

Section 1: Safety Information

Introduction

Thank you for purchasing this compact, high performance, air-cooled, engine-driven generator. It is designed to automatically supply electrical power to operate critical loads during a utility power failure.

This unit is factory installed in an all-weather, metal enclosure intended exclusively for outdoor installation. This generator will operate using either vapor withdrawn liquid propane (LP) or natural gas (NG).

NOTE: This generator is suitable for supplying typical residential loads such as induction motors (sump pumps, refrigerators, air conditioners, furnaces, etc.), electronic components (computer, monitor, TV, etc.), lighting loads, and microwaves, when sized correctly. This unit is equipped with a connectivity device which enables required connectivity to the generator and connectivity to the Internet. This allows the generator owner to monitor generator status from anywhere they have Internet or cellular service. It also allows the installer or technician to configure and manage the generator or accessory settings with Field Pro over Bluetooth®.

NOTE: This equipment has been tested and found to comply with the limits for a Class B digital device, pursuant to part 15 of the FCC Rules. These limits are designed to provide reasonable protection against harmful interference in a residential installation. This equipment generates, uses, and can radiate radio frequency energy and, if not installed and used in accordance with the instructions, may cause harmful interference to radio communications. However, there is no guarantee that interference will not occur in a particular installation. If this equipment does cause harmful interference to radio or television reception, which can be determined by turning the equipment off and on, the user is encouraged to try to correct the interference by one or more of the following measures:

- Reorient or relocate the receiving antenna.
- Increase the separation between the equipment and receiver.
- Connect the equipment into an outlet on a circuit different from that to which the receiver is connected.
- Consult the dealer or an experienced radio/TV technician for help.

NOTE: Changes or modifications not expressly approved by Generac Power Systems could void the user's authority to operate the equipment.

NOTE: Bluetooth® and the Bluetooth logo are trademarks of Bluetooth SIG, Inc.

NOTE: Wi-Fi® is a registered trademark of Wi-Fi Alliance®.

The information in this manual is accurate based on products produced at the time of publication. The manufacturer reserves the right to make technical updates, corrections, and product revisions at any time without notice.

Read This Manual Thoroughly

WARNING

Consult Manual. Read and understand manual completely before using product. Failure to completely understand manual and product could result in death or serious injury. (000100a)

If any section of this manual is not understood, contact the nearest Independent Authorized Service Dealer (IASD) or Generac Customer Service at 1-888-436-3722 (1-888-GENERAC), or visit ***www.generac.com*** for starting, operating, and servicing procedures. The owner is responsible for correct maintenance and safe use of the unit.

This manual must be used in conjunction with all other supporting product documentation supplied with the product.

IMPORTANT SAFETY INSTRUCTIONS. SAVE THESE INSTRUCTIONS for future reference. This manual contains important instructions that must be followed during placement, operation, and maintenance of the unit and its components. Always supply this manual to any individual that will use this unit, and instruct them on how to correctly start, operate, and stop the unit in case of emergency.

Safety Rules

The manufacturer cannot anticipate every possible circumstance that might involve a hazard. The alerts in this manual, and on tags and decals affixed to the unit, are not all inclusive. If using a procedure, work method, or operating technique that the manufacturer does not specifically recommend, verify that it is safe for others and does not render the equipment unsafe.

Throughout this publication, and on tags and decals affixed to the unit, DANGER, WARNING, CAUTION, and NOTE blocks are used to alert personnel to special instructions about a particular operation that may be hazardous if performed incorrectly or carelessly. Observe them carefully. Alert definitions are as follows:

⚠DANGER

Indicates a hazardous situation which, if not avoided, will result in death or serious injury.

(000001)

⚠WARNING

Indicates a hazardous situation which, if not avoided, could result in death or serious injury.

(000002)

⚠CAUTION

Indicates a hazardous situation which, if not avoided, could result in minor or moderate injury.

(000003)

NOTE: Notes contain additional information important to a procedure and will be found within the regular text of this manual.

These safety alerts cannot eliminate the hazards that they indicate. Common sense and strict compliance with the special instructions while performing the action or service are essential to preventing accidents.

How to Obtain Service

When the unit requires servicing or repairs, contact Generac Customer Service at 1-888-GENERAC (1-888-436-3722) or visit ***www.generac.com*** for assistance.

When contacting Generac Customer Service about parts and service, always supply the complete model and serial number of the unit as given on its data decal located on the unit. Record the model and serial numbers in the spaces provided on the front cover of this manual.

General Hazards

⚠DANGER

Loss of life. Property damage. Installation must always comply with applicable codes, standards, laws and regulations. Failure to do so will result in death or serious injury.

(000190)

⚠DANGER

Automatic start-up. Disconnect utility power and render unit inoperable before working on unit. Failure to do so will result in death or serious injury.

(000191)

⚠WARNING

Loss of life. This product is not intended to be used in a critical life support application. Failure to adhere to this warning could result in death or serious injury.

(000209b)

⚠WARNING

Equipment damage. This unit is not intended for use as a prime power source. It is intended for use as an intermediate power supply in the event of temporary power outage only. Doing so could result in death, serious injury, and equipment damage.

(000247a)

⚠WARNING

Accidental Start-up. Disconnect the negative battery cable, then the positive battery cable when working on unit. Failure to do so could result in death or serious injury.

(000130)

⚠WARNING

Equipment damage. Only qualified service personnel may install, operate, and maintain this equipment. Failure to follow proper installation requirements could result in death, serious injury, and equipment or property damage.

(000182a)

⚠WARNING

Electrocution. Potentially lethal voltages are generated by this equipment. Render the equipment safe before attempting repairs or maintenance. Failure to do so could result in death or serious injury.

(000187)

⚠WARNING

Electric shock. Only a trained and licensed electrician should perform wiring and connections to unit. Failure to follow proper installation requirements could result in death, serious injury, and equipment or property damage.

(000155a)

⚠WARNING

Moving Parts. Do not wear jewelry when starting or operating this product. Wearing jewelry while starting or operating this product could result in death or serious injury.

(000115)

⚠WARNING

Moving Parts. Keep clothing, hair, and appendages away from moving parts. Failure to do so could result in death or serious injury.

(000111)

⚠WARNING

Hot Surfaces. When operating machine, do not touch hot surfaces. Keep machine away from combustibles during use. Hot surfaces could result in severe burns or fire.

(000108)

WARNING

Equipment and property damage. Do not alter construction of, installation, or block ventilation for generator. Failure to do so could result in unsafe operation or damage to the generator. (000146)

WARNING

Risk of injury. Do not operate or service this machine if not fully alert. Fatigue can impair the ability to operate or service this equipment and could result in death or serious injury. (000215a)

WARNING

Injury and equipment damage. Do not use generator as a step. Doing so could result in falling, damaged parts, unsafe equipment operation, and could result in death or serious injury. (000216)

- Inspect generator regularly, and contact the nearest IASD for parts needing repair or replacement.

Exhaust Hazards

DANGER

Asphyxiation. Running engines produce carbon monoxide, a colorless, odorless, poisonous gas. Carbon monoxide, if not avoided, will result in death or serious injury. (000103)

WARNING

Asphyxiation. Always use a battery operated carbon monoxide alarm indoors and installed according to the manufacturer's instructions. Failure to do so could result in death or serious injury. (000178a)

WARNING

Equipment and property damage. Do not alter construction of, installation, or block ventilation for generator. Failure to do so could result in unsafe operation or damage to the generator. (000146)

WARNING

Fire risk. Fuel and vapors are extremely flammable. Do not operate indoors. Doing so could result in death, serious injury, or property or equipment damage. (000281)

Electrical Hazards

DANGER

Electrocution. Contact with bare wires, terminals, and connections while generator is running will result in death or serious injury. (000144)

DANGER

Electrocution. Never connect this unit to the electrical system of any building unless a licensed electrician has installed an approved transfer switch. Failure to do so will result in death or serious injury. (000150)

DANGER

Electrical backfeed. Use only approved switchgear to isolate generator from the normal power source. Failure to do so will result in death, serious injury, and equipment damage. (000237)

DANGER

Electrocution. Verify electrical system is properly grounded before applying power. Failure to do so will result in death or serious injury. (000152)

DANGER

Electrocution. Do not wear jewelry while working on this equipment. Doing so will result in death or serious injury. (000188)

DANGER

Electrocution. Water contact with a power source, if not avoided, will result in death or serious injury. (000104)

DANGER

Electrocution. In the event of electrical accident, immediately shut power OFF. Use non-conductive implements to free victim from live conductor. Apply first aid and get medical help. Failure to do so will result in death or serious injury. (000145)

Fire Hazards

WARNING

Fire hazard. Do not obstruct cooling and ventilating airflow around the generator. Inadequate ventilation could result in fire hazard, possible equipment damage, death or serious injury. (000217)

WARNING

Fire and explosion. Installation must comply with all local, state, and national electrical building codes. Noncompliance could result in unsafe operation, equipment damage, death, or serious injury. (000218)

WARNING

Fire hazard. Use only fully-charged fire extinguishers rated "ABC" by the NFPA. Discharged or improperly rated fire extinguishers will not extinguish electrical fires in automatic standby generators. (000219)

WARNING

Consult Manual. Read and understand manual completely before using product. Failure to completely understand manual and product could result in death or serious injury. (000100a)

WARNING

Electrocution. Refer to local codes and standards for safety equipment required when working with a live electrical system. Failure to use required safety equipment could result in death or serious injury. (000257)

WARNING

Risk of Fire. Unit must be positioned in a manner that prevents combustible material accumulation underneath. Failure to do so could result in death or serious injury. (000147)

Comply with regulations the local agency for workplace health and safety has established. Also, verify that the generator is installed in accordance with the manufacturer's instructions and recommendations. Following proper installation, do nothing that might alter a safe installation and render the unit in noncompliance with the aforementioned codes, standards, laws, and regulations.

Explosion Hazards

DANGER

Explosion and fire. Fuel and vapors are extremely flammable and explosive. No leakage of fuel is permitted. Keep fire and spark away. Failure to do so will result in death or serious injury. (000192)

DANGER

Explosion and fire. Connection of fuel source must be completed by a qualified professional technician or contractor. Incorrect installation of this unit will result in death, serious injury, and property and equipment damage. (000151a)

DANGER

Risk of fire. Allow fuel spills to completely dry before starting engine. Failure to do so will result in death or serious injury. (000174)

WARNING

Risk of Fire. Hot surfaces could ignite combustibles, resulting in fire. Fire could result in death or serious injury. (000110)

Battery Hazards

DANGER

Electrocution. Do not wear jewelry while working on this equipment. Doing so will result in death or serious injury. (000188)

WARNING

Explosion. Do not dispose of batteries in a fire. Batteries are explosive. Electrolyte solution can cause burns and blindness. If electrolyte contacts skin or eyes, flush with water and seek immediate medical attention. (000162)

WARNING

Explosion. Batteries emit explosive gases while charging. Keep fire and spark away. Wear protective gear when working with batteries. Failure to do so could result in death or serious injury. (000137a)

WARNING

Electrical shock. Disconnect battery ground terminal before working on battery or battery wires. Failure to do so could result in death or serious injury. (000164)

WARNING

Risk of burns. Batteries contain sulfuric acid and can cause severe chemical burns. Wear protective gear when working with batteries. Failure to do so could result in death or serious injury. (000138a)

WARNING

Risk of burn. Do not open or mutilate batteries. Released electrolyte solution has been known to be harmful to the skin and eyes and to be toxic. If electrolyte contacts skin or eyes, flush with water and seek immediate medical attention. (000163b)

Always recycle batteries in accordance with local laws and regulations. Contact your local solid waste collection site or recycling facility to obtain information on local recycling processes. For more information on battery recycling, visit Call2Recycle website at: ***http://Call2Recycle.org/locator***.

Section 2: General Information

Generator Components and Control Locations

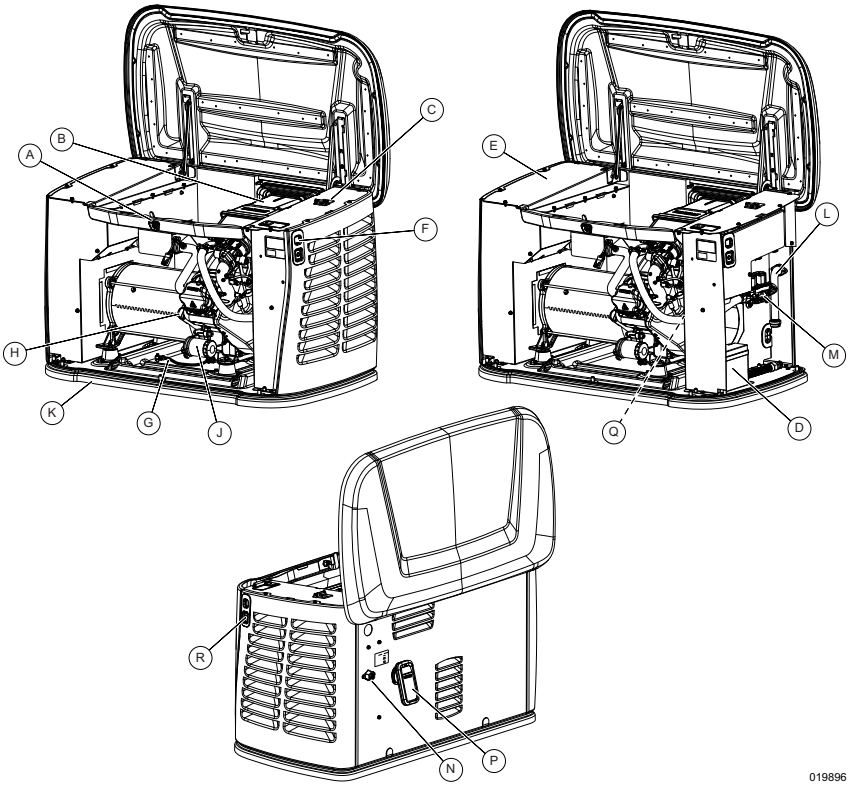

Figure 2-1. 10 kW—Components and Control Locations

A	Lock with cover	G	Oil drain hose	M	Dual shutoff valve
B	Airbox with air cleaner	H	Oil fill cap/dipstick	N	Fuel inlet
C	Main line circuit breaker (generator disconnect)	J	Oil filter	P	Connectivity accessory
D	Battery compartment (battery not supplied)	K	Composite base	Q	Data decal location
E	Exhaust enclosure	L	Sediment trap	R	Generator emergency shut-down switch
F	Status LED indicators				

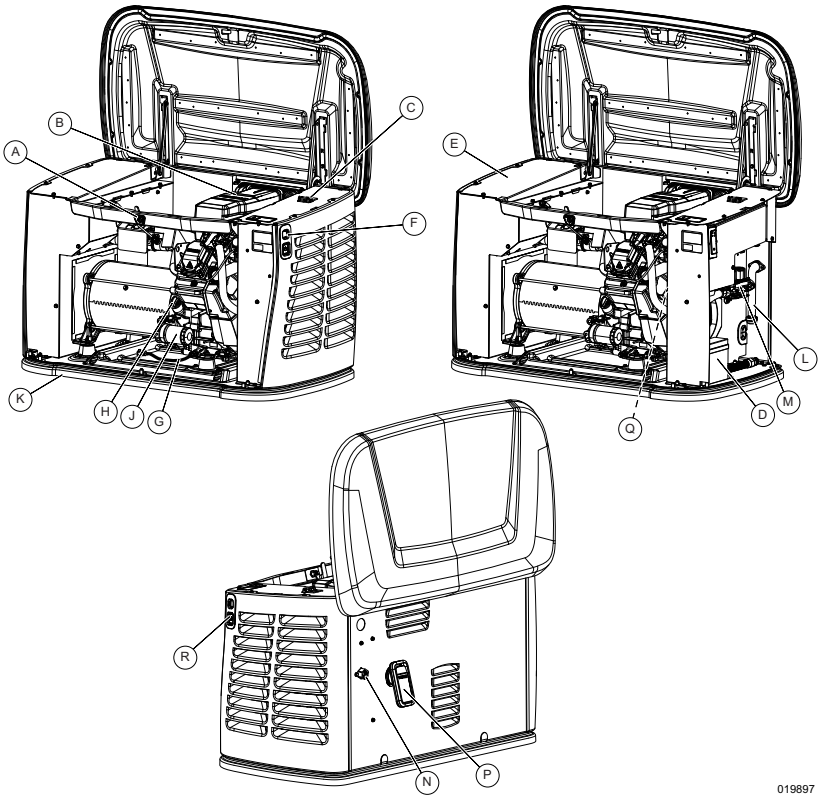

Figure 2-2. 14 kW–18 kW—Components and Control Locations

A	Lock with cover	G	Oil drain hose	M	Dual shutoff valve
B	Airbox with air cleaner	H	Oil fill cap/dipstick	N	Fuel inlet
C	Main line circuit breaker (generator disconnect)	J	Oil filter	P	Connectivity accessory
D	Battery compartment (battery not supplied)	K	Composite base	Q	Data decal location
E	Exhaust enclosure	L	Sediment trap	R	Generator emergency shutdown switch
F	Status LED indicators				

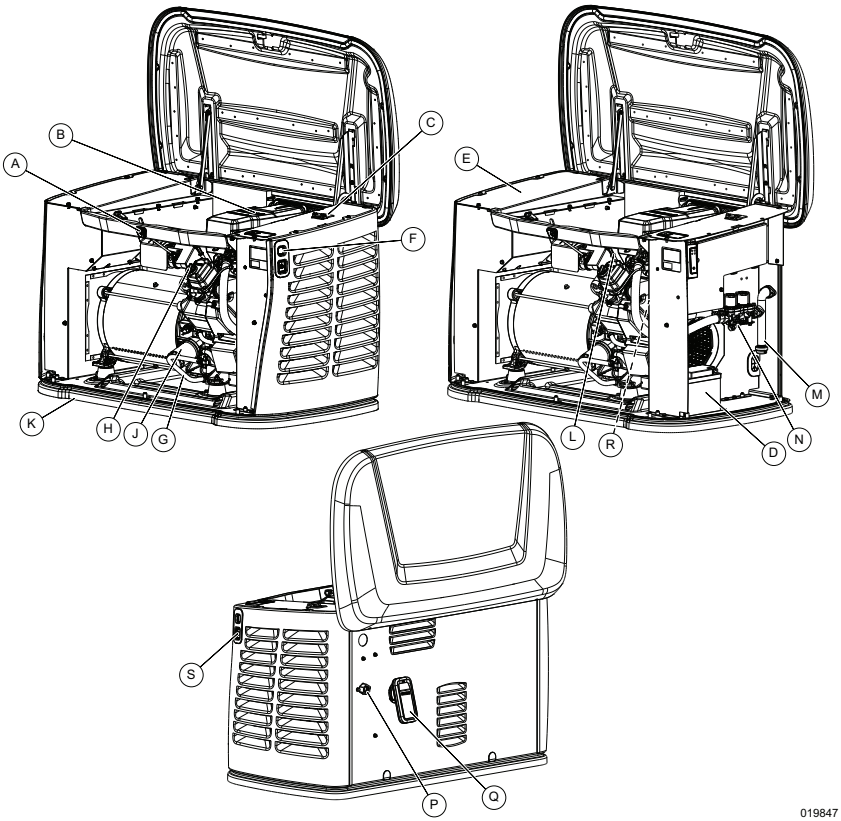

Figure 2-3. 22 kW–28 kW—Components and Control Locations

A	Lock with cover	G	Oil drain hose	N	Dual shutoff valve
B	Airbox with air cleaner	H	Oil fill cap	P	Fuel inlet
C	Main line circuit breaker (generator disconnect)	J	Oil filter	Q	Connectivity accessory
D	Battery compartment (battery not supplied)	K	Composite base	R	Data decal location
E	Exhaust enclosure	L	Oil dipstick	S	Generator emergency shutdown switch
F	Status LED indicators	M	Sediment trap		

Data Decals

Two decals on the generator provide information about the unit itself and required fuel inlet pressure for correct operation.

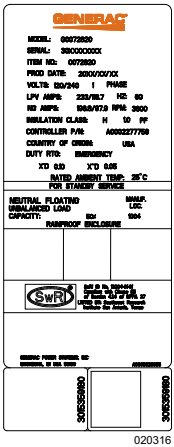	**Model Data Decal** Includes important information about the unit including: • model number • serial number • production date • voltage • frequency • amps • country of origin • rated ambient temperature The model data decal displays a certification symbol by the Southwest Research Institute (SwRI).
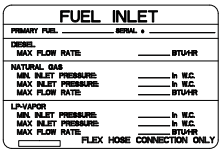	**Fuel Inlet Pressure** Displays unit serial number, max flow rate, and minimum and maximum inlet pressures for natural gas (NG) and liquid propane (LP) supply.

Specifications

Generator

Model	10 kW	14 kW	18 kW	22 kW	24 kW	26 kW	28 kW
Rated voltage	240						
Rated maximum load current (amps) with LP*	42	58	75	92	100	108	116
Main line circuit breaker (generator disconnect)	45 amp	60 amp	80 amp	100 amp		110 amp	125 amp
Phase	1						
Rated AC frequency	60 Hz						
Battery requirement (field supplied)	A0006487350 12 volts, AGM Powersport Battery Group BTX20L 310CCA minimum						
Enclosure	Aluminum						
Weight (lb / kg) (without battery)	334 / 156	391 / 177	426 / 193	451 / 205	461 / 209	524 / 238	524 / 238
Normal operating range	This unit is tested to perform within an operating temperature of -20 °F (-29 °C) to 122 °F (50 °C). For areas where temperatures fall below 32 °F (0 °C), a cold weather kit is recommended. When operated above 77 °F (25 °C), there may be a decrease in engine power. See ***Engine***.						
These generators are rated in accordance with UL 2200, Safety Standard for Stationary Engine Generator Assemblies, and CSA-C22.2 No. 100-04 Standard for Motors and Generators. * NG ratings will depend on specific fuel joules/BTU content. Typical derates are between 10-20% off the LP gas rating.							

Engine

Model	10 kW	14/18 kW	22–28 kW
Engine type	G-Force™ 400 Series	G-Force™ 800 Series	G-Force™ 1000 Series
Number of cylinders	1	2	2
Displacement	459 cc	817 cc	997 cc
Cylinder block	Aluminum with cast iron sleeve		
Recommended spark plug	A0003637864		
Spark plug gap	0.020 in (0.508 mm)		
Hydraulic lifters	Yes		
Starter	12 VDC		
Oil capacity including filter	Approx. 1.4 qt (1.3 L)	Approx. 2.5 qt (2.4 L)	Approx. 2.2 qt (2.1 L)
Recommended oil filter	070185ES		
Recommended air filter	0E9371AS	0J8478S	
Engine power is subject to and limited by such factors as fuel BTU/joules, ambient temperature, and altitude. Engine power decreases approximately 3.5% for each 1,000 ft (304.8 m) above sea level, and also will decrease approximately 1% for each 10 °F (6 °C) above 60 °F (15 °C) ambient temperature.			

A detailed specification sheet for a particular generator is available from a local IASD.

Protection Systems

The generator may need to run for long periods of time with no operator present to monitor engine or generator conditions. The generator is equipped with protection systems to automatically shut down the unit to protect against potentially damaging conditions. Some of these systems include:

Alarms:

- High Temperature
- Low Oil Pressure
- Overcrank
- Overspeed
- Overvoltage
- Undervoltage
- Overload
- Underspeed
- RPM Sensor Loss
- Controller Fault
- Wiring Error

Warnings:

- Charger Warning
- Charger Missing AC
- Low Battery
- Battery Problem
- Exercise Set Error
- Download Failure

Unit features LED indicators to inform the operator as to which mode the generator is in, as well as an external set of LED indicators to alert the operator when a fault condition occurs. Alarms and warnings can also be viewed in the Mobile Link app. See ***Operation*** for more information about alarms and control panel operation.

NOTE: A warning indicates a condition on the generator which should be addressed, but will not shut down generator. An alarm shuts down the generator to protect system from any damage. In event of an alarm, an owner can clear the alarm and restart generator prior to contacting an IASD. Contact an IASD if the intermittent issue occurs again.

Emissions

The United State Environmental Protection Agency (U.S. EPA) requires this engine to comply with exhaust emissions standards. Locate the Emission Control Information decal on the engine to review certification details. The engine in this generator is certified to operate on liquid propane or natural gas. The emissions control system for this engine is EM (Engine Modification), ECM (Engine Control Module), and HO2S (Heated Oxygen Sensor). See the included emissions warranty for emissions warranty information. Follow the maintenance specifications in this manual to ensure the engine complies with applicable emissions standards for the duration of the product's life.

Fuel Requirements

DANGER

Explosion and Fire. Fuel and vapors are extremely flammable and explosive. Add fuel in a well ventilated area. Keep fire and spark away. Failure to do so will result in death or serious injury. (000105)

The engine has been fitted with a dual fuel carburetion system. The unit will run on NG or LP gas (vapor), but has been factory-configured to run on NG. The fuel system will be configured for the available fuel source during installation.

Recommended fuels should have a BTU content of at least 1,000 BTUs per ft^3 (37.26 megajoules per m^3) for natural gas, or at least 2,500 BTUs per ft^3 (93.15 megajoules per m^3) for LP gas.

NOTE: If converting to LP gas from NG, a minimum LP tank size of 250 gal (946 L) is recommended. See installation manual for complete procedures and details.

Battery Requirements

12 volts, AGM Powersport Battery Group BTX20L 310CCA minimum.

NOTE: When replacing batteries, use the same number and the type above.

Battery Charger

The battery charger is integrated into the control panel module in all models. It operates as a smart charger, verifying output charging levels are safe and continuously optimized to promote maximum battery life.

NOTE: Do not use external battery chargers.

NOTE: Internal battery charger is not intended for completely discharged batteries. Fully discharged batteries must be charged with a different source before use.

Engine Oil Requirements

See ***Engine Oil Requirements*** for correct oil viscosity.

Configuring the Generator

Generator must be registered and configured to be activated upon initial startup and to be placed in AUTO. See installation manual for complete instructions.

Generator and Internet Connectivity

This unit is equipped with a connectivity accessory which enables connectivity to the generator and the internet. See connectivity accessory owner's manual by scanning the QR code included with the connectivity accessory packaging for further information.

Generator setup, configuration, and monitoring is done through a compatible mobile device using Generac mobile applications, which are available in the Apple Store (iOS) and Google Play Store (Android). The homeowner application for monitoring and managing connectivity-enabled generators is Mobile Link. For qualified installers, the application for initial generator setup and configuration is Generac Field Pro, which can be used to connect to the generator over Bluetooth® when in close proximity. See installation manual for more information.

Replacement Parts

Description	10 kW	14 kW	18 kW	22 kW	24 kW	26 kW	28 kW
BTX20L Battery	A0006487350						
Spark plug	A0003637864						
Oil filter	070185ES						
Air filter	0E9371AS	0J8478S					
Control panel fuse	0D7178T						
Transfer switch fuses	See transfer switch manual for part number						
Harness fuse	0E7403C						

Accessories

NOTE: Performance enhancing accessories are available for air-cooled generators. Contact an IASD or visit ***www.generac.com*** for additional information on replacement parts, accessories, and extended warranties. See also ***http://www.ordertree.com/generac/air-cooled-homestandby-generators/***.

Accessory	Description
Cold Weather Accessories* • Battery Heater • Oil Heater • Breather Heater * each sold separately	 • Recommended in areas where temperatures fall below 32 °F (0 °C). • Recommended in areas where temperatures fall below 32 °F (0 °C). • Recommended in areas where temperatures fall below 0 °F (-18 °C).
Scheduled Maintenance Kit	Includes all items necessary to perform complete routine maintenance on the generator along with oil recommendations (oil not included).
Touch-Up Paint Kit	If the generator enclosure is scratched or damaged, it is important to touch-up the paint to protect from future corrosion. The touch-up paint kit includes the necessary paint to correctly maintain or touch-up a generator enclosure.
Extended Warranty Coverage	Extend generator warranty coverage by purchasing extended warranty coverage. Covers parts, labor, and limited travel. This extended coverage is applicable to registered units and end-user proof of purchase and maintenance records must be available upon request. Available for Generac® and Guardian® products. Not available for Corepower™, PowerPact®, Synergy™, and EcoGen™ products or units installed outside of the United States, United States Territories, and Canada.

Accessory	Description
LTE LP Fuel Level Monitor	The LTE enabled LP fuel level monitor provides constant monitoring of a connected LP fuel tank. Monitoring the LP tank's fuel level is an important step in verifying the generator is ready to run during an unexpected power failure. Status alerts are available through a free application to notify users when the LP tank needs a refill.
Generac Load Managers (50 and 100 amps)	Generac Load Managers (LM's) are used to optimize the performance of a standby generator. They manage large electrical loads upon startup and shed them to aid in recovery when overloaded. In many cases, using LM's can reduce the overall size and cost of the system.

Section 3: Operation

Site Prep Verification

DANGER

Automatic start-up. Disconnect utility power and render unit inoperable before working on unit. Failure to do so will result in death or serious injury.

(000191)

WARNING

Equipment damage. Only qualified service personnel may install, operate, and maintain this equipment. Failure to follow proper installation requirements could result in death, serious injury, and equipment or property damage.

(000182a)

NOTE: Generac Field Pro app required for installation. See installation manual for details on downloading app.

Generator must be installed to allow unimpeded airflow into and out of generator.

Mechanical and gravity outdoor air intake openings for air distribution and supply systems must be located not less than 10 ft (3.05 m) horizontally from generator enclosure. See Section 401.4 in the ICC Mechanical Code for additional information.

Verify all shrubs or tall grasses within 3 ft (0.91 m) of intake and discharge louvers on the sides of the enclosure have been removed. Install generator on high ground where water levels will not rise and endanger it. Unit must not operate in or be subjected to standing water. Verify all potential water sources such as water sprinklers, roof runoff, rain gutter downspouts, and sump pump discharges are directed away from unit.

Generator Enclosure

Enclosure lid is locked prior to shipment. A set of keys is attached to cardboard on top of generator.

All appropriate panels must be in place during any operation of the generator. This includes operation by a servicing technician while conducting troubleshooting procedures.

NOTE: Keys provided with this unit are intended for service personnel use only.

Opening Generator Lid

Proceed as follows to open generator lid:

1. See *Figure 3-1*. Use keys to open generator lid. One lock (A) secures generator lid. Lock is located behind bezel in the center of front access panel. Insert key vertically. Press down on lid above lock and turn to the left to unlock.

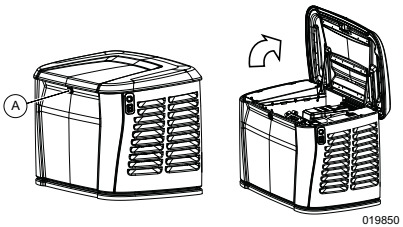

Figure 3-1. Opening the Lid

NOTE: Always verify lock is unlocked before attempting to lift lid.

2. Remove key from lock and secure in a safe place.
3. Lift lid upwards to open.

Removing Front Access Panel

See *Figure 3-2*. Verify key has been removed from lock. Remove front access panel (A) by lifting straight up and out after opening generator lid.

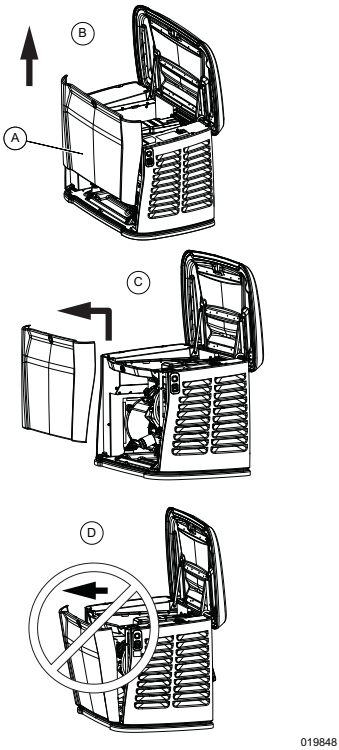

Figure 3-2. Remove Front Access Panel

NOTE: Always lift front access panel straight up before pulling away from enclosure (B and C). Do not pull panel away from the enclosure before lifting up (D).

Removing Intake Side Panel

See *Figure 3-3*. Intake side panel (A) must be removed to access battery compartment, dual shutoff valve, and sediment trap.

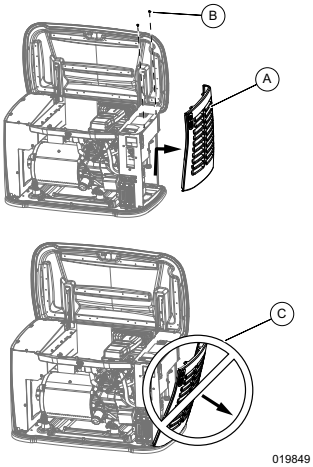

Figure 3-3. Intake Side Panel Removal

Proceed as follows to remove intake side panel:

1. Raise lid and remove front panel.
2. Use a T30 star bit to remove two mounting screws (B).
3. Lift intake panel up and away from generator.
4. Place intake panel in a safe, flat area to prevent damage.

NOTE: Always lift intake side panel straight up before pulling away from enclosure. Do not pull panel away from enclosure before lifting up (C).

Closing Generator Lid

Proceed as follows to close generator lid:

1. Install intake side panel, if removed.
2. Install front access panel, if removed.
3. Press down on lid to close.
4. Lock lid and secure keys in a safe location.

Generator Main Line Circuit Breaker (Generator Disconnect)

See ***Figure 3-4***. This is a 2-pole main line circuit breaker (MLCB) (generator disconnect) (A) rated according to relevant specifications.

The generator MLCB (generator disconnect) can be locked in OFF (OPEN) for security. Use an appropriately-sized padlock (not included) with a shackle long enough to pass through both lock tabs (B).

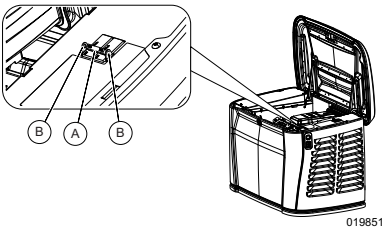

Figure 3-4. Main Line Circuit Breaker (MLCB)

NOTE: DO NOT leave generator MLCB (generator disconnect) locked in OFF (OPEN) during normal generator operation. Leaving generator MLCB (generator disconnect) in OFF (OPEN) will prevent generator from powering structure during a power outage when placed in AUTO mode.

LED Indicator Lights

See ***Figure 3-5***. Four LEDs are visible behind a translucent lens on the generator side panel. These LEDs indicate generator operating status.

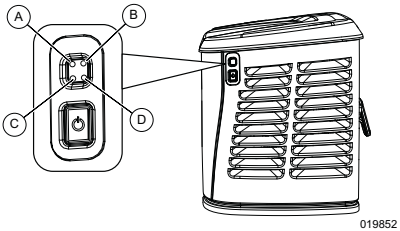

Figure 3-5. LED Indicator Lights

- Green LED “Ready” light (A) illuminates when utility is present and control panel is in AUTO. LED flashes in one second intervals when automatic transfer switch converts to generator power during a utility power outage. LED flashes in two second intervals if utility power is lost, and unit is in the delay timer period prior to cranking and starting.
- Red LED “Alarm” light (B) illuminates when generator is OFF. LED flashes in one second intervals when a fault is detected. Contact an IASD.
- Yellow LED “MANUAL” or “Non-Critical Alert” light (C) illuminates when control panel is in MANUAL and unit is running. LED flashes in one second intervals when a Warning is active or maintenance is required.
- Blue LED “Service Mode” light (D) illuminates when control panel is in SERVICE.

NOTE: Yellow LED may be illuminated at the same time as either the red or green LED. Blue LED may be illuminated at the same time as any other LED.

Generator Emergency Shutdown Switch

⚠CAUTION

Equipment Damage. The emergency shutdown switch is not to be used to power down the unit under normal operating circumstances. Doing so will result in equipment damage. (000399a)

All generators are equipped with an external means of shutting down the generator which complies with the latest NEC code requirement. Primary generator shutdown sequence is described in ***Shutting Generator Down While Under Load or During a Utility Outage***.

See ***Figure 3-6***. A generator emergency shutdown switch (A) is located on the exterior of the generator side panel. This generator emergency shutdown switch shuts down generator and disables restarts.

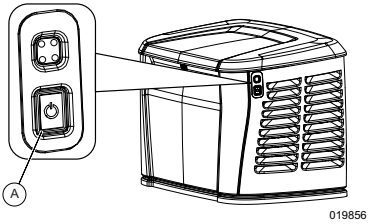

Figure 3-6. External Generator Emergency Shutdown Switch (all models)

NOTE: Whenever possible, perform primary shutdown procedure before disabling generator with generator emergency shutdown switch.

NOTE: Generator will not start if generator emergency shutdown switch is active. Mobile Link app displays “Generator has been stopped via generator emergency shutdown switch” and a red LED illuminates and flashes. Press OFF button for three seconds to clear this condition. Unit can then be placed in AUTO or MANUAL.

Control Panel Interface

See ***Figure 3-7***. The control panel interface (A) is located under the enclosure lid. Open lid as directed in ***Opening Generator Lid***.

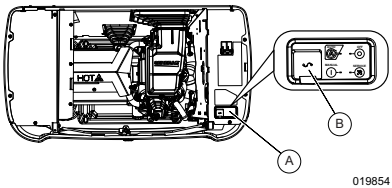

Figure 3-7. Generator Control Panel

The 7.5A fuse is located beneath rubber cover (B) to the left of the control panel.

Verify lock is securely out of the way before closing unit.

Using the AUTO/OFF/MANUAL/ SERVICE Buttons

Button	Description of Operation
AUTO	Activates fully automatic system operation. Allows unit to automatically start and exercise generator according to exercise timer (see ***Setting the Exercise Timer***).
OFF	Shuts down engine and prevents automatic operation of unit.
MANUAL	Cranks and starts generator. Transfer to stand-by power will not occur unless there is a utility failure.
SERVICE	Suspends Mobile Link® notifications and locks out the ability to receive remote start/stop commands. Allows unit to be placed in any other mode (AUTO, OFF, MANUAL) at the same time as SERVICE mode for diagnostics or servicing purposes.

NOTE: Damage caused by mis-wiring of interconnect wires is not warrantable.

Operating Modes

Mode	Description
MANUAL	• Will not transfer to standby if utility is present. • Transfers to standby if utility drops below 65% of nominal for five consecutive seconds (dealer programmable) after warm-up. • Transfers back when utility returns for 15 consecutive seconds (dealer programmable). Engine continues to run until removed from MANUAL.
AUTO	• Starts and runs if utility drops for five consecutive seconds (dealer programmable). • Starts an engine warm-up timer (duration varies when ***Cold Smart Start*** is enabled). –Will not transfer if utility subsequently returns. –Transfers to standby if utility is not present. • Transfers to utility once utility returns (above 80% of nominal) for 15 consecutive seconds (dealer programmable). • Will not transfer to utility unless utility returns. Unit will shut down if OFF button is pressed or a shutdown alarm is present. • Unit will shut down after one minute cool-down time when utility power returns.

EXERCISE	• Will not exercise if unit is already running in either AUTO or MANUAL. • During exercise, unit will transfer if utility drops during exercise for five seconds (dealer programmable), and will switch to AUTO. • During exercise unit will transfer if Transfer on Exercise setting is enabled.
SERVICE	• Allows for servicing and diagnostics while suspending notifications from Mobile Link. • Allows parameter edits from Mobile Link or Generac Field Pro. • Will not allow remote start/stop commands to occur during SERVICE mode for user safety. • Allows any other operation mode at the same time (AUTO, OFF, MANUAL).

Setting the Exercise Timer

This generator is equipped with a configurable exercise timer. Configuration can be performed though the Field Pro application. There are six settings for the exercise timer:

Day/Time: Generator will start and exercise for period defined, on day of week and at time of day specified. During this exercise period, unit runs for the configured duration and then shuts down.

Exercise Frequency: Exercise Frequency can be set to Weekly, Biweekly, or Monthly. If Monthly is selected, day of month must be selected from 1–28. Generator will exercise on scheduled day each month.

Transfer on Scheduled Exercise: Transfer of loads to generator output will occur if setting is enabled for 3, 6, or 12 month exercise interval. This will be done at normal speed and voltage. Default setting is Disabled.

Exercise Duration: Exercise duration is adjustable between 5–20 minutes. Default duration is 5 minutes.

NOTE: If connected to the internet, exercise timer will automatically adjust for Daylight Saving Time.

NOTE: The exercise feature will operate only when generator is in AUTO, and will not work unless this procedure is performed. If NOT connected to the internet, current date/time will need to be reset by connecting to generator via Field Pro app every time the 12 volt battery or 120VAC T1 power is disconnected and then reconnected, and/or when the fuse is removed.

Low Speed Exercise (Quiet-Test™) Profile: Unit will run at operating speed for approximately five seconds, then drop speed to prepare for Quiet-Test. Speed will drop to predetermined Quiet-Test speed after approximately 40 seconds and continue to run until Quiet-Test is complete, as set for exercise time length.

Smart Exercise: Selectable function which monitors generators last-time-ran. Unit will skip scheduled exercise if generator ran for at least 5 consecutive minutes within the 72 hours prior to a scheduled exercise.

Table 3-1 details exercise information and programming options for all home standby generators.

NOTE: If Quiet-Test is disabled, generator will exercise at the rated rpm.

Table 3-1. Generator Exercise Characteristics

Generator Size	10–28 kW
Exercise Frequency Options	Weekly/Bi-Weekly/Monthly
Exercise Time Length	5*-20 minutes
Transfer on Exercise Frequency Options	Disabled*, 3, 6, 12 month
** Default setting*	

Exercise Operation in Apps

Exercise Now: Structure is not powered by generator power source during exercise. Available in Field Pro and Mobile Link apps.

Exercise Now with Transfer: Structure is powered by generator power source during exercise. Available in Field Pro and Mobile Link apps.

Battery Charger

NOTE: Battery charger is integrated into the control module in all models.

The battery charger operates as a smart charger which verifies:

- output is continually optimized to promote maximum battery life.
- charging levels are safe.

NOTE: A warning is displayed in Mobile Link app when battery needs service.

NOTE: Do not use external battery chargers.

NOTE: Engine has a built-in battery charger while running. System will power internal controller charger at all times.

Manual Transfer Operation

DANGER

Electrocution. Do not manually transfer under load. Disconnect transfer switch from all power sources prior to manual transfer. Failure to do so will result in death or serious injury, and equipment damage. (000132)

Prior to automatic operation, manually exercise transfer switch to verify there is no interference with correct operation of the mechanism. Manual operation of transfer switch is required if electronic operation should fail.

Transfer to Generator Power Source

Proceed as follows to transfer to generator power:

1. Unlock and open lid.
2. Verify generator is in OFF mode; verify LED is illuminated on control panel.
3. Set generator MLCB (generator disconnect) to OFF (OPEN).
4. Turn off utility power supply to transfer switch using means provided (such as a utility MLCB).
5. See transfer switch owner's manual to set main contacts to STANDBY (loads connected to standby power source).
6. Press MANUAL button on control panel to crank and start engine.
7. Allow engine to stabilize and warm up for a few minutes.
8. Set generator MLCB (generator disconnect) to ON (CLOSED). Standby power source now powers loads.
9. Close and lock lid.

Transfer to Utility Power Source

Shut down generator and transfer to utility source after utility power has been restored. Proceed as follows to manually transfer to utility power and shut down generator:

1. Unlock and open lid.
2. Set generator MLCB (generator disconnect) to OFF (OPEN).
3. Run engine for one minute at no-load to stabilize internal temperature.
4. Press OFF button on control panel. Engine will shut down.
5. Verify utility power supply to transfer switch is turned off.
6. See transfer switch owner's manual to set main contacts to UTILITY (loads connected to utility power source).
7. Turn on utility power supply to transfer switch using means provided (such as a utility MLCB).
8. Press AUTO button on control panel.
9. Set generator MLCB (generator disconnect) to ON (CLOSED).
10. Close and lock lid.

Selecting Automatic Transfer Operation

Proceed as follows to select automatic operation:

1. Verify transfer switch main contacts are set to UTILITY (loads connected to utility power source).
2. Verify normal utility power source voltage is available to loads connected to transfer switch.
3. Unlock and open lid.
4. Press AUTO button on control panel.
5. Set generator MLCB (generator disconnect) to ON (CLOSED).
6. Close and lock lid.

Generator will start automatically when utility source voltage drops below a preset level. Loads are transferred to standby power source after unit starts.

Automatic Sequence of Operation

Utility Failure

If generator is set to AUTO when utility fails (below 65% of nominal), a five second (dealer programmable) line interrupt delay time is started. The engine cranks and starts if utility power is not available when timer expires. An engine warm-up timer will be initiated once engine is started. Timer duration

varies depending on whether or not ***Cold Smart Start*** is enabled. The controller will transfer load to generator when warm-up time expires. If utility power is restored (above 80% nominal) at any time from initiation of engine start until generator is ready to accept load (warm-up time has not elapsed), the controller completes start cycle and runs generator through its normal cool down cycle. However, load will remain on utility source.

Cranking

The system will control the cyclic cranking as follows:

- **10–28 kW Units:** five cranking cycles as follows: 16 seconds cranking, seven seconds resting, 16 seconds cranking, seven seconds resting, followed by three additional cycles of seven seconds cranking followed by seven seconds resting.

NOTE: An alarm will be triggered if generator does not start after these five attempts.

Cold Smart Start

Cold Smart Start is factory-disabled, but can be enabled in the Field Pro app. Generator will monitor ambient temperature when Cold Smart Start is enabled. The warm-up delay will be adjusted based on prevailing conditions.

See ***Table 3-2***. If ambient temperature is below a fixed temperature (based on model) upon startup in AUTO, generator will warm up for 30 seconds. This allows engine to warm before a load is applied. The generator will startup with normal warm-up delay of five seconds if ambient temperature is at or above the fixed temperature.

Table 3-2. Cold Smart Start Set Points	
Generator size	**10–28 kW**
Fixed temperature	50 °F (10 °C)

A check for correct output voltage buildup will be performed when generator engine is started.

Cleaning Cycle

If some condition impedes normal voltage creation, such as frost crystals or dust/dirt preventing a good electrical connection, start sequence will be interrupted so a cleaning cycle of the internal electrical connections can be attempted.

Cleaning cycle is an extended warm up period which lasts for several minutes while normal generator voltage output is determined to be low. During this cycle, Mobile Link app will display “Warming Up” on the display screen.

Mobile Link app will show “Under Voltage” if cleaning cycle fails to clear the obstruction. After several minutes, alarm message can be cleared, and the generator restarted.

If the problem persists, make no further attempts to start. Contact an IASD.

Load Transfer

The transfer of load when generator is running is dependent upon operating mode.

Load Shed Before Return to Utility

Load shed before a return to utility is factory-disabled, but can be enabled in the Field Pro app.

When enabled, the generator will start a load shed event by reducing the frequency to trigger Generac Energy Management devices to “shed” their associated loads before returning to target frequency and commanding the transfer switch to return to utility. This verifies the managed load is off before the transfer to utility, which is intended to prevent certain undesirable conditions for the given load.

Shutting Generator Down While Under Load or During a Utility Outage

⚠DANGER

Automatic start-up. Disconnect utility power and render unit inoperable before working on unit. Failure to do so will result in death or serious injury.

(000191)

IMPORTANT NOTE: Follow these steps, in order, during utility outages to avoid equipment damage. Shutdowns may be required during utility outages to perform routine maintenance or to conserve fuel.

To turn generator OFF:

1. Unlock and open lid.
2. Set utility MLCB to OFF (OPEN).
3. Set generator MLCB (generator disconnect) to OFF (OPEN).
4. Allow generator to run for cool-down for approximately one minute.
5. Set generator to OFF at the controller.
6. Remove 7.5A fuse from controller.

To turn generator back ON:

1. Install 7.5A fuse in controller.
2. Verify generator MLCB (generator disconnect) is OFF (OPEN).
3. Set generator to AUTO mode at the controller.
4. Generator will start and run. Allow generator to run and warm up for a few minutes.
5. Set generator MLCB (generator disconnect) to ON (CLOSED).
6. Set utility MLCB to ON (CLOSED).
7. Close and lock lid.

The system now operates in automatic mode.

This page intentionally left blank.

Section 4: Maintenance

Maintenance

Regular maintenance will improve performance and extend engine/equipment life. Generac Power Systems, Inc. recommends that all maintenance work be performed by an Independent Authorized Service Dealer (IASD). Regular maintenance, replacement, or repair of the emissions control devices and systems may be performed by any repair shop or person of the owner's choosing. To obtain emissions control warranty service free of charge, the work must be performed by an IASD. See the emissions warranty.

Preparing for Maintenance

DANGER

Automatic start-up. Disconnect utility power and render unit inoperable before working on unit. Failure to do so will result in death or serious injury.

(000191)

WARNING

Equipment damage. Only qualified service personnel may install, operate, and maintain this equipment. Failure to follow proper installation requirements could result in death, serious injury, and equipment or property damage.

(000182a)

Proceed as follows to prepare unit for maintenance:

1. Unlock and lift lid.
1. Set generator MLCB (generator disconnect) to OFF (OPEN).
2. If running during a utility outage, allow generator to run and cool down for one minute with no load.
3. Press OFF button on controller.
4. Remove 7.5A fuse from control panel.
5. Remove front panel and intake side panel.

Performing Scheduled Maintenance

It is important to perform maintenance as specified in the ***Service Schedule*** for correct generator operation. Engine oil and oil filter must be changed after first 25 hours of operation.

Mobile Link app will prompt for Schedule A, Schedule B, or Schedule C maintenance to be performed. Schedule A maintenance consists of oil, oil filter, and battery check. Schedule B maintenance includes oil, oil filter, battery check, air cleaner, and spark plug(s). Schedule C maintenance includes an oil change after the first 25 hours of engine run-time.

Since most maintenance alerts occur at the same time (most have two year intervals), only one alert will appear in Mobile Link app at a time. Once first alert is cleared, the next active alert will be displayed.

Service Schedule

Service	Daily If Run Continuously or Before Each Use	Every Year	Schedule A Every Two Years or 200 Hours	Schedule B Every Four Years or 400 Hours	Schedule C 25 Hour Break-in
Inspect enclosure louvers for dirt and debris *	•				
Inspect lines and connections for fuel or oil leaks	•				
Check engine oil level	•				
Inspect for water intrusion **		•			
Perform fuel system leak test		•			
Check battery condition			•	•	
Replace engine oil and oil filter †			•	•	•
Replace engine air filter				•	
Replace spark plug(s)				•	
Inspect/clean sediment trap	*See local codes and guidelines.*				

Contact the nearest IASD for assistance if necessary.
* Remove any shrubs or tall grasses which have grown within 3 ft (0.91 m) of intake and discharge louvers on enclosure sides. Clean any debris (dirt, grass clippings, etc.) which may have accumulated inside enclosure.
** Verify all sources of potential water intrusion such as water sprinklers, roof run-off, rain gutter downspouts, and sump pump discharges are directed away from generator enclosure.
† In cold weather conditions (ambient below 40 °F [4.4 °C]), or if unit is operated continuously in hot weather conditions (ambient above 85 °F [29.4 °C]), change engine oil and filter every year or 100 hours of operation.

NOTE: Contact an IASD or visit ***www.generac.com*** for additional information on replacement parts.

Maintenance Log

Battery Inspection and Charge Check

Dates Performed:

Oil, Oil Filter, Air Filter, and Spark Plug Replacement

Dates Performed:

Checking Engine Oil Level

WARNING

Risk of burns. Allow engine to cool before draining oil or coolant. Failure to do so could result in death or serious injury.

(000139)

WARNING

Skin irritation. Avoid prolonged or repeated contact with used motor oil. Used motor oil has been shown to cause skin cancer in laboratory animals. Thoroughly wash exposed areas with soap and water.

(000210)

CAUTION

Engine damage. Verify proper type and quantity of engine oil prior to starting engine. Failure to do so could result in engine damage.

(000135)

IMPORTANT NOTE: Verify oil level daily when power outages necessitate running generator for extended periods. Generator will shut down if oil level is low.

Proceed as follows to check engine oil level:

1. Unlock and lift lid.
2. Set generator MLCB (generator disconnect) to OFF (OPEN).
3. Press SERVICE button on control panel.
4. Allow generator to run for a cool-down period of approximately one minute, if generator was running during an outage.
5. Press OFF button to turn generator off. Wait five minutes.
6. See ***Figure 2-1***, ***Figure 2-2***, or ***Figure 2-3***. Remove oil dipstick and wipe it dry with a clean cloth.
7. Completely insert oil dipstick into oil dipstick tube and remove.
8. Observe oil level. Oil level should be at FULL mark on oil dipstick.
9. If necessary, remove oil fill cap and add recommended oil to engine (with oil dipstick removed) until oil level reaches FULL mark. Insert oil dipstick and install fill cap. See ***Engine Oil Requirements***.
10. Close and lock lid.

To restart generator:

1. Unlock and lift lid.
2. Press AUTO button on control panel.
3. **If currently experiencing an outage:** Allow generator to start and warm up for a few minutes.
4. Set generator MLCB (generator disconnect) to ON (CLOSED).
5. Press SERVICE button on control panel. Verify blue SERVICE light is off.
6. Close and lock lid.

The system is now operating in AUTO.

Engine Oil Requirements

CAUTION

Engine damage. Verify proper type and quantity of engine oil prior to starting engine. Failure to do so could result in engine damage.

(000135)

Engine oil should be serviced in accordance with the recommendations of this manual to maintain product warranty. Generac maintenance kits consisting of oil filter, air filter, and spark plug(s) are available through an IASD. Engine oil is available separately.

All Generac oil kits meet minimum American Petroleum Institute (API) Service Class SJ, SL, or better. Do not use special additives.

After the 25 hour break-in period (and at every interval there-after), it is recommended to use Generac's proprietary 5W-20 gaseous engine oil (GEO) for continuous use. It is specifically formulated for use in gaseous powered Generac generators.

Changing the Oil and Oil Filter

Proceed as follows to change oil and oil filter:

1. Unlock and lift lid.
2. **If unit is not currently running:** Press MANUAL button on control panel to start engine, and run unit until it is thoroughly warmed up.
3. Press OFF button on control panel to shut down engine.
4. Press SERVICE button on control panel.
5. See ***Figure 4-1***, ***Figure 4-2***, or ***Figure 4-3***. Remove front panel when unit has cooled. Pull oil drain hose (A) free of retaining clip. Remove cap from oil drain hose and place free end into a suitable container. Drain oil.

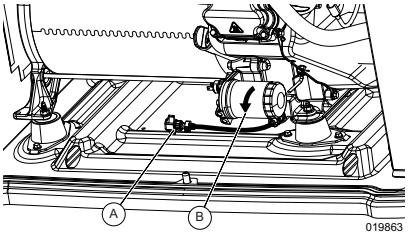

Figure 4-1. Oil Filter and Drain Location (10 kW)

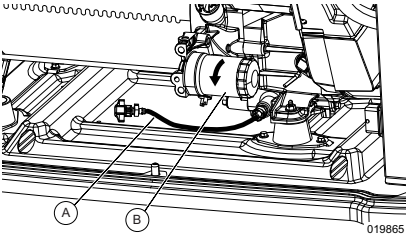

Figure 4-2. Oil Filter and Drain Location (14–18 kW)

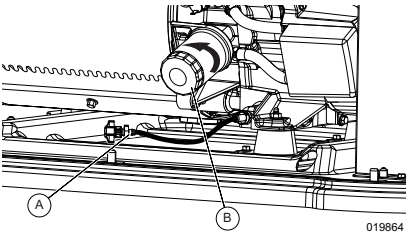

Figure 4-3. Oil Filter and Drain Location (22–28 kW)

6. Install cap on oil drain hose. Position and secure oil drain hose with the retaining clip.
7. Remove oil filter (B) by turning it counter-clockwise.
8. Apply a light coating of clean engine oil to gasket of new filter.
9. Screw new filter on by hand until gasket lightly contacts oil filter adapter. Tighten filter an additional three-quarter to one full turn.
10. Fill engine with recommended oil. See ***Engine Oil Requirements***.
11. Press MANUAL button on control panel to start engine. Run for one minute, and inspect for leaks.
12. Press OFF button on control panel to stop engine. Wait five minutes.
13. Inspect oil level. Add oil as needed. DO NOT OVERFILL.
14. Insert oil dipstick and/or attach fill cap.
15. Press AUTO button on control panel to return unit to AUTO.
16. Press SERVICE button on control panel and verify blue SERVICE light is off.
17. Close and lock lid.
18. Dispose of used oil and filter according to local, state, or national codes.

Servicing the Air Cleaner

WARNING

Risk of fire. Never operate engine without the air cleaner installed. Operating engine without the air cleaner could result in death or serious injury. (000249)

WARNING

Explosion and fire. Never clean air filter element with gasoline or low flash-point detergents. Doing so could result in death, serious injury, or equipment damage. (000580)

Proceed as follows to service air cleaner:

1. Unlock and lift lid.
2. Press SERVICE button on control panel.
3. Press OFF button on control panel.
4. Remove front panel.
5. See ***Figure 4-4*** or ***Figure 4-5***. Remove cover clips (A) and air cleaner cover (B).

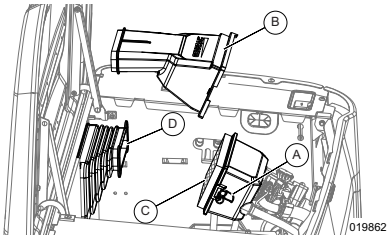

Figure 4-4. Servicing Air Cleaner (10 kW)

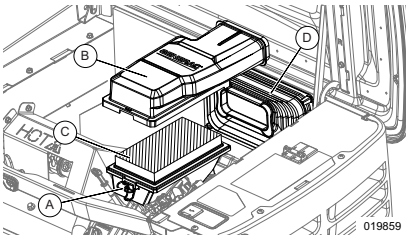

Figure 4-5. Servicing Air Cleaner (14–28 kW)

6. Remove old air filter element (C) and discard.
7. Thoroughly clean air cleaner enclosure of any dust or debris.
8. Install a new air filter element.
9. Install air cleaner cover and fasten cover clips.
10. Verify air inlet duct (D) is correctly connected to air cleaner cover.
11. Press AUTO button on control panel.

12. Press SERVICE button on control panel and verify blue SERVICE light is off.
13. Close and lock lid.

Spark Plug(s)

WARNING

Electric shock. Do not disconnect spark plug wires with engine running. Doing so could result in death or serious injury.

(000140a)

Proceed as follows to inspect spark plug gap(s) and replace spark plug(s):

1. With generator OFF and engine cool, unlock and lift lid.
2. Press SERVICE button on control panel.
3. Press OFF button on control panel.
4. Remove front panel.
5. Clean area around base of spark plug(s) to keep dirt and debris out of engine.

NOTE: Clean and re-gap spark plug(s) in emergency situations only. Otherwise, replace spark plug(s).

6. Remove spark plug(s) and inspect spark plug gap(s) using a wire feeler gauge. Replace spark plug(s) if spark plug gap is out of specification. See ***Engine***.

NOTE: See ***Figure 4-6***. New spark plug(s) should have spark plug gap checked prior to installation.

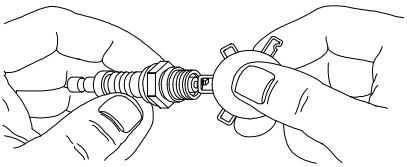

000211

Figure 4-6. Spark Plug Gap Measurement

7. Install spark plug(s), and tighten to 18.4 ft-lbs (25 Nm).
8. Press AUTO button on control panel.
9. Press SERVICE button on control panel and verify blue SERVICE light is off.
10. Install front panel.
11. Close and lock lid.

Battery Maintenance

DANGER

Electrocution. Do not wear jewelry while working on this equipment. Doing so will result in death or serious injury.

(000188)

WARNING

Explosion. Do not dispose of batteries in a fire. Batteries are explosive. Electrolyte solution can cause burns and blindness. If electrolyte contacts skin or eyes, flush with water and seek immediate medical attention.

(000162)

WARNING

Explosion. Batteries emit explosive gases while charging. Keep fire and spark away. Wear protective gear when working with batteries. Failure to do so could result in death or serious injury.

(000137a)

WARNING

Explosion. Batteries emit explosive gases. Always disconnect negative battery cable first to avoid spark. Failure to do so could result in death or serious injury.

(000238)

WARNING

Electrical shock. Disconnect battery ground terminal before working on battery or battery wires. Failure to do so could result in death or serious injury.

(000164)

WARNING

Risk of burns. Batteries contain sulfuric acid and can cause severe chemical burns. Wear protective gear when working with batteries. Failure to do so could result in death or serious injury.

(000138a)

WARNING

Risk of burn. Do not open or mutilate batteries. Released electrolyte solution has been known to be harmful to the skin and eyes and to be toxic. If electrolyte contacts skin or eyes, flush with water and seek immediate medical attention.

(000163b)

- Servicing of batteries is to be performed or supervised by personnel knowledgeable of batteries and the required precautions. Keep unauthorized personnel away from batteries.

Battery should be regularly inspected per ***Service Schedule***. Contact an IASD for assistance if necessary.

Strictly observe the following precautions when working on batteries:

- Remove 7.5A fuse from generator control panel.
- Disconnect battery charger as directed in ***Inspecting Battery***.
- Disconnect charging source prior to connecting or disconnecting battery terminals.
- Wear rubber gloves and boots.
- Do not place tools or metallic objects on top of battery.

Per UL 2200 Edition 3, Clause 96.5.e:

"CAUTION — A battery presents a risk of high short circuit current. The following precautions are to be observed when working on batteries.

- Remove watches, rings, or other metal objects;
- Use tools with insulated handles."

Inspecting Battery

Proceed as follows to inspect battery:

1. Unlock and lift lid.
2. Set generator MLCB (generator disconnect) to OFF (OPEN).
3. Press OFF button on control panel.
4. Press SERVICE button on control panel.
5. Allow generator to run for a cool-down period of approximately one minute, if generator was running during an outage.
6. Press OFF button to turn generator off. Wait five minutes.
7. Remove 7.5A fuse from control panel.
8. Remove front panel.
9. Remove intake side panel. (See ***Intake Side Panel Removal***.)
10. See ***Figure 4-7***. Disconnect J6 (2 wire connector) at the controller to disconnect battery charger AC input T1/Neutral cable.

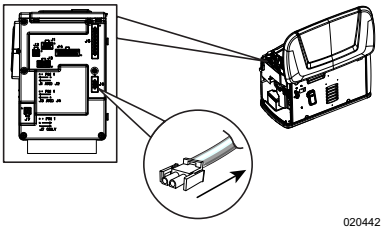

Figure 4-7. Disconnecting Battery Charger Cable

11. See ***Figure 4-8***. Inspect battery terminals and cables for tightness and corrosion. Tighten and clean as necessary.

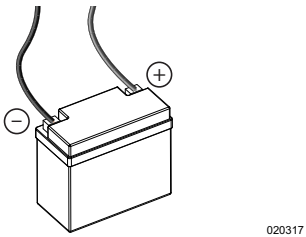

Figure 4-8. Battery Cables

12. Connect positive (+) battery cable, then negative (-) battery cable.
13. Connect J6 (2 wire connector) at the controller to connect battery charger AC input T1/Neutral cable.
14. Install intake side panel, and install 7.5 A fuse.
15. Press AUTO button on control panel.
16. Press SERVICE button on control panel and verify blue SERVICE light is off.
17. Install front panel.
18. Close and lock lid.

Replacing Battery

Proceed as follows to replace battery:

1. Verify generator is in OFF mode, then unlock and lift lid and remove front panel.
2. Press SERVICE button on control panel.
3. Remove 7.5A fuse from control panel.
4. Remove intake side panel.
5. Remove controller top cover.
6. See ***Figure 4-7***. Disconnect J6 (2 wire connector) at the controller to disconnect battery charger AC input T1/Neutral cable.
7. Disconnect battery cables. Remove negative (-) battery cable first.
8. Remove old battery from battery tray and place new battery in battery tray.
9. Connect battery. Observe battery polarity. Damage will occur if battery is connected incorrectly.
   a. Connect red positive (+) battery cable to positive (+) battery terminal. Tighten to 45-50 **in-lbs** (5-6 Nm).
   b. Connect black negative (-) battery cable to negative (-) battery terminal. Tighten to 45-50 **in-lbs** (5-6 Nm).
   c. Install red battery terminal cover on red positive (+) terminal.
10. Connect J6 (2 wire connector) at the controller to connect battery charger AC input T1/Neutral cable.
11. Install controller top cover and intake side panel.
12. Insert 7.5A fuse into generator control panel.
13. Press AUTO button on control panel.
14. Press SERVICE button on control panel and verify blue SERVICE light is off.
15. Install front panel.
16. Close and lock lid.

Battery Disposal

Always recycle batteries in accordance with local laws and regulations. Contact your local solid waste collection site or recycling facility to obtain information on local recycling pro-

cesses. For more information on battery recycling, visit Call2Recycle website at: ***http://Call2Recycle.org/locator***.

Cleaning the Sediment Trap

The sediment trap removes contaminants (moisture and fine particles) from gaseous fuels before they enter the fuel regulator. Accumulated moisture and particles must be emptied from the sediment trap per local codes and guidelines.

Proceed as follows to clean sediment trap:

1. Unlock and open lid.
2. Remove front panel.
3. Remove intake side panel. See ***Intake Side Panel Removal***.
4. Turn generator fuel supply OFF.
5. See ***Figure 4-9***. Unscrew and remove cap (A).

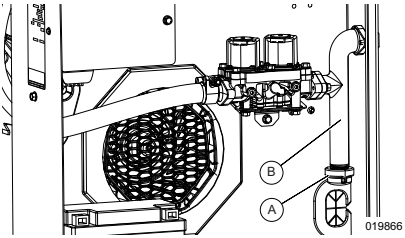

Figure 4-9. Cleaning the Sediment Trap

6. Use a clean-out tool (not provided) to remove accumulated moisture and particles from cap and body (B).
7. Wipe inside of each component with a clean, dry, lint-free cloth.
8. Seal threads of cap with appropriate sealing compound. Install cap and hand-tighten.
9. Tighten cap with an appropriately sized pipe wrench. DO NOT overtighten.
10. Turn generator fuel supply ON. Inspect for leaks by spraying all connection points with a non-corrosive gas leak detection fluid. Solution should not be blown away or form bubbles.
11. Install intake side panel and front panel.
12. Close and lock lid.
13. Contact an IASD if leaks are detected.

Post Maintenance Checks

Proceed as follows to perform post maintenance checks:

1. Perform required maintenance procedure(s).
2. Install intake side panel and front panel if removed. (See ***Intake Side Panel Removal*** and ***Front Access Panel Removal***.)
3. Install 7.5A fuse in control panel.
4. Press AUTO button on control panel. Allow unit to run for one minute with no load (if running during a utility outage).
5. Set generator MLCB (generator disconnect) to ON (CLOSED).
6. Set utility MLCB to ON (CLOSED).
7. Close and lock lid.

The system is now in AUTO.

NOTE: If correct utility is present at this time, generator will perform its usual shutdown process.

Performing Fuel System Leak Test

DANGER

Explosion and fire. Fuel and vapors are extremely flammable and explosive. No leakage of fuel is permitted. Keep fire and spark away. Failure to do so will result in death or serious injury. (000192)

All products are factory-tested before shipping to verify the performance and integrity of the fuel system. However, it is important to perform a final fuel system leak test before starting the generator. The entire fuel system should be tested from supply to regulator.

See ***Figure 4-10***. Perform a final fuel system leak test after generator installation. The test will identify possible leaks at all connection points (A).

It is best practice to perform a fuel system leak test during normally-scheduled maintenance.

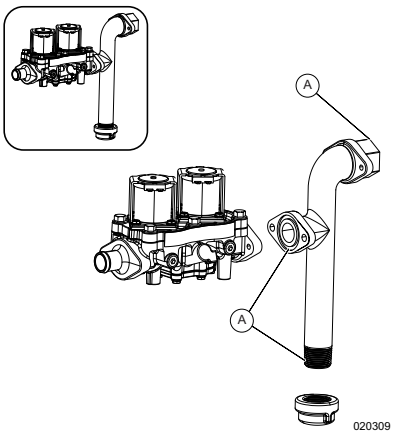

Figure 4-10. Connection Points to Leak Check

Inspect for leaks by spraying all connection points with a non-corrosive gas leak detection fluid. The solution should not be blown away or form bubbles.

Attention After Submersion

DO NOT start or operate generator if it has been submerged in water. Have an IASD thoroughly clean, dry, and inspect generator following any submersion in water. If the structure (home) has been flooded, it should be inspected by a certified electrician to verify there will not be any electrical problems during generator operation or when utility power is returned.

Corrosion Protection

Regular scheduled maintenance should be conducted to inspect unit for corrosion. Inspect all metal components of generator, including base frame, brackets, alternator can, the entire fuel system (inside and outside of the generator), and fastener locations. If there is corrosion found on generator components (e.g. regulator, engine/alternator mounts, fuel plenum, etc.), replace parts as necessary.

Periodically wash and wax enclosure using automotive type products. Do not spray unit with a hose or power washer. Use warm, soapy water and a soft cloth. Frequent washing is recommended in salt water/coastal areas. Spray engine linkages with a light oil such as WD-40®.

Remove From and Return To Service Procedure

Remove From Service

⚠WARNING

Explosion. Batteries emit explosive gases. Always disconnect negative battery cable first to avoid spark. Failure to do so could result in death or serious injury. (000238)

If generator cannot be exercised monthly, at a minimum, and will be out of service longer than 90 days, proceed as follows to prepare generator for storage:

1. Unlock and lift lid.
2. Start engine and allow it to warm up.
3. Close fuel shutoff valve in fuel supply line and allow engine to stop.
4. Set generator MLCB (generator disconnect) to OFF (OPEN) once engine has stopped.
5. Press OFF button on control panel.
6. Disconnect J6 (2 wire connector) at the controller to disconnect battery charger AC input T1/Neutral cable.
7. Remove 7.5A fuse from generator control panel.
8. Disconnect battery cables. Remove negative (-) battery cable first.
9. Drain oil completely while engine is still warm, and then fill crankcase with oil. See ***Changing the Oil and Oil Filter***.
10. Attach a tag to engine indicating viscosity and classification of the new oil in the crankcase.
11. Remove spark plug(s) and spray a fogging agent into spark plug(s) threaded openings. Install and tighten spark plug(s) to specification.
12. Remove battery and store in a cool, dry place.
13. Close and lock lid.
14. Clean and wipe down generator enclosure.

Return to Service

⚠WARNING

Explosion. Batteries emit explosive gases. Always connect positive battery cable first to avoid spark. Failure to do so could result in death or serious injury. (000133)

⚠CAUTION

Equipment damage. Do not make battery connections in reverse. Doing so will result in equipment damage.

(000167a)

Proceed as follows to return unit to service after storage:

1. Unlock and lift lid.
2. Inspect engine tag for oil viscosity and classification. Drain and fill with recommended oil if necessary.
3. Verify state of battery. Charge battery to 100% state of charge. Replace battery if faulty. See ***Replacing Battery***.
4. Clean and wipe down generator enclosure.
5. Verify 7.5A fuse is removed from generator control panel.
6. Connect battery. Observe battery polarity. Damage will occur if battery is connected incorrectly. Install positive (+) battery cable first.
7. Connect J6 (2 wire connector) at the controller to battery charger AC input T1/Neutral cable.
8. Open fuel shutoff valve.

9. Insert 7.5 A fuse into generator control panel.
10. Press MANUAL button to start unit. Allow unit to warm up for a few minutes.
11. Press OFF button to stop unit.
12. Set generator MLCB (generator disconnect) to ON (CLOSED).
13. Press AUTO button on control panel.
14. Close and lock lid.

The generator is ready for service.

NOTE: Exercise timer and current date and time must be reset if battery is discharged or has been disconnected.

This page intentionally left blank.

Section 5: Troubleshooting / Quick Reference Guide

Generator Troubleshooting

Problem	Cause	Correction
Engine will not crank	Blown fuse.	Correct short circuit condition by replacing 7.5 A fuse in generator control panel. Contact an IASD if fuse continues to blow.
	Loose, corroded, or faulty battery cables.	Tighten, clean, or replace as necessary.*
	Faulty starter contact.	
	Faulty starter motor.	
	Discharged battery.	Charge or replace battery.
Engine cranks but will not start	No fuel.	Replenish fuel / turn on fuel valve.
	Faulty fuel solenoid (FS).	Contact an IASD for assistance.
	Harness/wiring issue.	
	Faulty spark plug(s).	Inspect spark plug gap; replace spark plug(s) if out of tolerance.
Engine starts hard and runs rough	Plugged or damaged air cleaner.	Inspect and clean air cleaner.
	Faulty spark plug(s).	Inspect spark plug gap; replace spark plug(s) if out of tolerance.
	Incorrect fuel pressure.	Verify fuel pressure to regulator is 10–12 in water column (2.49–2.99 kPa) for LP gas, and 3.5–7.0 in water column (0.87–1.74 kPa) for NG.
	Incorrect fuel setting.	Update fuel setting to correct setting.
	Internal engine issue.	Contact an IASD for assistance.
Unit is set to OFF, but engine continues to run	Controller wired incorrectly.	Contact an IASD for assistance.
	Faulty control board.	
No AC output from generator	Generator MLCB (generator disconnect) is OFF (OPEN).	Set generator MLCB (generator disconnect) to ON (CLOSED).
	Generator internal failure.	Contact an IASD for assistance.
	Engine may be warming up. See ***Cold Smart Start***.	Verify status using Field Pro or Mobile Link apps.

Problem	Cause	Correction
No transfer to standby after utility source failure	Generator MLCB (generator disconnect) is OFF (OPEN).	Set generator MLCB (generator disconnect) to ON (CLOSED).
	Faulty transfer switch coil.	Contact an IASD for assistance.
	Faulty transfer relay.	
	Transfer relay circuit open.	
	Faulty control logic board.	
	Engine may be warming up. See ***Cold Smart Start***.	Verify status using Field Pro or Mobile Link apps.
Unit consumes large amounts of oil	Excessive engine oil.	Adjust oil to correct level. See ***Checking Engine Oil Level***.
	Faulty engine breather.	Contact an IASD for assistance.
	Incorrect type or viscosity of oil.	See ***Engine Oil Requirements***.
	Damaged gasket, seal, or hose.	Inspect for oil leaks.
	Restricted air filter.	Replace air filter.
Cellular or Wi-Fi® network connection broken or intermittent	Various.	See connectivity accessory owner's manual.
Unit will not go into AUTO mode	Unit has not been setup and configured through the Field Pro app.	Complete configuration process through the Field Pro app.
* Contact an IASD or visit ***www.generac.com*** for assistance.		

NOTE: IASD must have an active Tech ID and be air-cooled certified to perform any warrantable repairs and submit warranty claims related to air-cooled products.

Quick Reference Guide

Press and hold OFF button for at least 3 seconds to clear an active alarm. Red LED will become solid when the alarm is cleared. Contact an air-cooled certified IASD if alarm reoccurs.

Active Alarm	LED	Problem	Action	Solution
NONE	FLASHING GREEN	Unit running in AUTO but no power in structure.	Check generator MLCB (generator disconnect).	Check generator MLCB (generator disconnect). If it is ON, contact an IASD.
HIGH TEMPERATURE	RED	Unit shuts down during operation.	Check LEDs / app for alarms.	Inspect ventilation around generator, intake, exhaust, and rear of generator. If no obstructions are present, contact an IASD.
OVERLOAD REMOVE LOAD	RED	Unit shuts down during operation.	Check LEDs / app for alarms.	Clear alarm and remove household loads from generator. Put in AUTO and restart.
RPM SENSE LOSS	RED	Unit was running and shut down, attempts to restart.	Check LEDs / app for alarms.	Clear alarm and remove household loads from generator. Put into AUTO and restart. If generator does not start, contact an IASD.
NONE	GREEN	Unit will not start in AUTO with utility loss.	Check app for start delay countdown.	If startup delay is greater than expected, contact an IASD to adjust from 2 to 1,500 seconds.
LOW OIL PRESSURE	RED	Unit will not start in AUTO with utility loss.	Check LEDs / app for alarms.	Check oil level and add oil as needed. If oil level is correct, contact an IASD.
RPM SENSE LOSS	RED	Unit will not start in AUTO with utility loss.	Check LEDs / app for alarms.	Check battery condition in app. Contact an IASD if battery condition shows good.
OVERCRANK	RED	Unit will not start in AUTO with utility loss.	Check LEDs / app for alarms.	Verify fuel line shutoff valve is ON. Clear alarm. Start unit in MANUAL. If it does not start, or starts and runs rough, contact an IASD.
LOW VOLTS REMOVE LOAD	RED	Unit will not start in AUTO with utility loss.	Check LEDs / app for alarms.	Clear alarm and remove household loads from generator. Put in AUTO and restart.
OVERSPEED	RED	Unit will not start in AUTO with utility loss.	Check LEDs / app for alarms.	Contact an IASD.
UNDER-VOLTAGE	RED	Unit will not start in AUTO with utility loss.	Check LEDs / app for alarms.	Contact an IASD.
UNDER-SPEED	RED	Unit will not start in AUTO with utility loss.	Check LEDs / app for alarms.	Contact an IASD.
STEPPER OVERCURRENT	RED	Unit will not start in AUTO with utility loss.	Check LEDs / app for alarms.	Contact an IASD.
WIRING ERROR	RED	Unit will not start in AUTO with utility loss.	Check app for additional information.	Contact an IASD.

Active Alarm	LED	Problem	Action	Solution
OVER-VOLTAGE	RED	Unit will not start in AUTO with utility loss.	Check LEDs / app for alarms.	Contact an IASD.
SHUTDOWN SWITCH (2800)	FLASH-ING RED	Unit will not start. Generator emergency shutdown on unit activated.	Check generator emergency shutdown switch	Hold OFF button for 3 seconds to clear alarm.
SHUTDOWN SWITCH (2801)	FLASH-ING RED	Unit will not start. Remote generator emergency shutdown activated.	Check generator emergency shutdown switch	Set generator emergency shutdown switch to CLOSED (I). Hold OFF button for 3 seconds to clear alarm.
LOW BATTERY	YELLOW	Yellow LED illuminated in any state.	Check app for additional information.	Check battery condition in Mobile Link or Field Pro app. Contact an IASD if battery condition shows good.
BATTERY PROBLEM	YELLOW	Yellow LED illuminated in any state.	Check app for additional information.	Contact an IASD.
CHARGER WARNING	YELLOW	Yellow LED illuminated in any state.	Check app for additional information.	Contact an IASD.
CHARGER MISSING AC	YELLOW	Yellow LED illuminated in any state.	Check app for additional information.	Contact an IASD.
SERVICE A	YELLOW	Yellow LED illuminated in any state.	Check app for additional information.	Perform SERVICE A maintenance. Select “Clear Maintenance” in app to clear.
SERVICE B	YELLOW	Yellow LED illuminated in any state.	Check app for additional information.	Perform SERVICE B maintenance. Select “Clear Maintenance” in app to clear.
SERVICE C	YELLOW	Yellow LED illuminated in any state.	Check app for additional information.	Perform SERVICE C maintenance. Select “Clear Maintenance” in app to clear.
INSPECT BATTERY	YELLOW	Yellow LED illuminated in any state.	Check app for additional information.	Inspect battery. Select “Clear Maintenance” in app to clear.

External LED Indicators

OFF	solid red
OFF + ALARM	flashing red
OFF + WARNING/MAINT	solid red / flashing yellow
AUTO	solid green
AUTO + ALARM	solid green / flashing red
AUTO + WARNING/MAINT	solid green / flashing yellow
running in AUTO	solid green
AUTO + Utility Loss Delay Countdown	flashing green (2 sec)
running in AUTO + Transfer	flashing green (1 sec)
MANUAL + ALARM	flashing red / solid yellow
running in MANUAL + WARNING/MAINT	flashing yellow
running in MANUAL	solid yellow
running in MANUAL + Transfer	flashing green (1 sec) / solid yellow
Emergency Shutdown	flashing red
SERVICE (service button pressed)	solid blue + other LED color (green, yellow, or red)
Controller Firmware Update In Progress	all lights / flashing counterclockwise (red-green-yellow-blue)
ECM Firmware Update In Progress	all lights / flashing clockwise (red-blue-yellow-green)

020555a

This page intentionally left blank.

Part No. A0004332577 Rev. B 07/09/2025
©2025 Generac Power Systems, Inc.
All rights reserved
Specifications are subject to change without notice.
No reproduction allowed in any form without prior
written consent from Generac Power Systems, Inc.

Generac Power Systems, Inc.
S45 W29290 Hwy. 59
Waukesha, WI 53189
1-888-GENERAC (1-888-436-3722)
www.generac.com